TECHNICAL DATA

Three Phase Electric Motors - Aluminum Frame
PE31 100L2-8
1.1 kW / 1.5 Cv
715 RPM

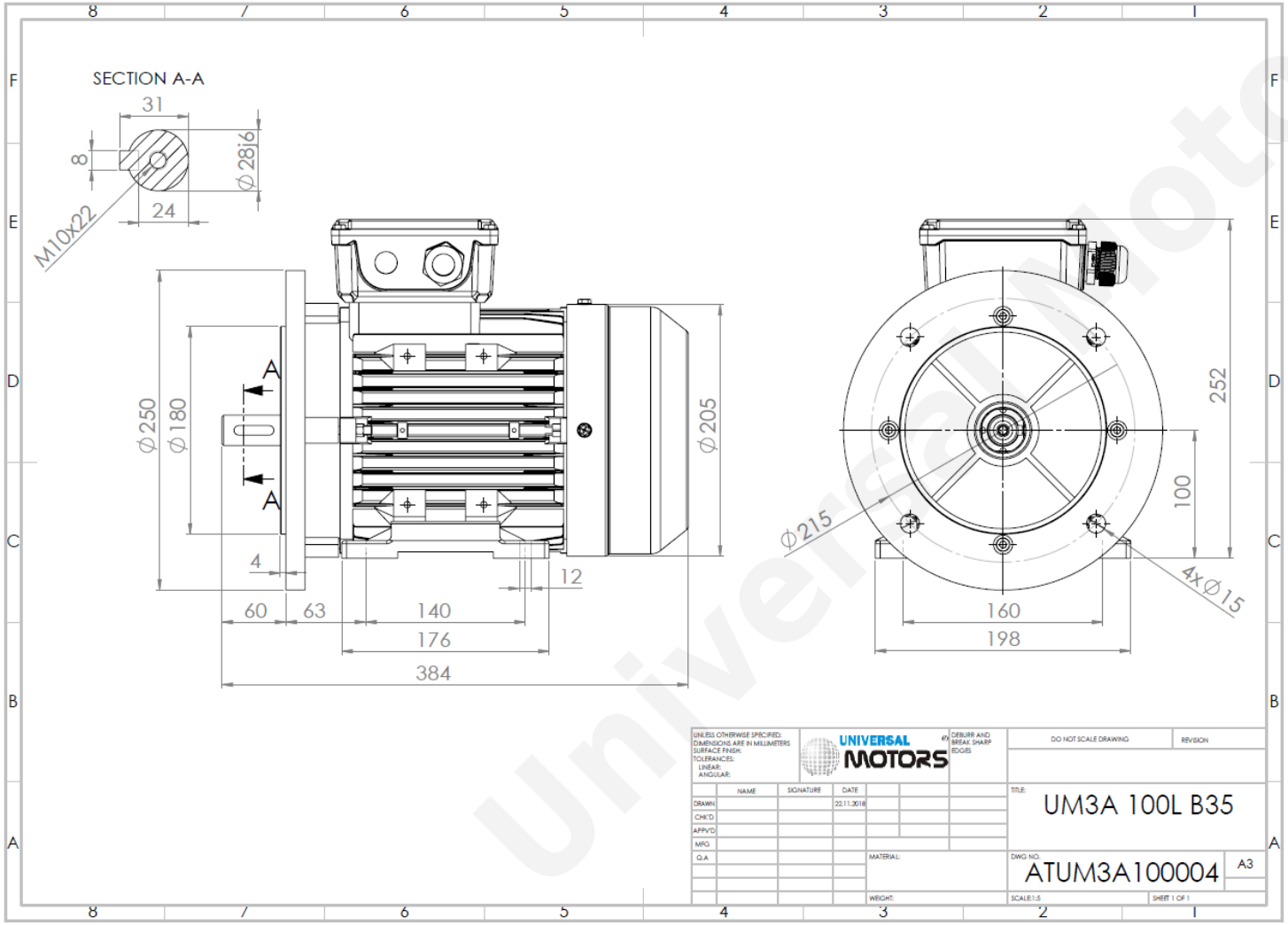

Motor type:	**PE31 100L2-8**
Output:	**1.1 kW / 1.5 Cv**
Speed (min^{-1}):	**715 RPM**
Frequency:	**50 Hz**
Voltage:	**400 V**
Current:	**3.1 A**
Power factor (Cos Ø):	**0.653**
Poles:	**8**
Insulation class:	**F**
Temperature rise Class:	**B**
Efficiency 50%:	**75.0 %**
Efficiency 75%:	**78.6 %**
Efficiency 100%:	**78.7 %**
Torque:	**14.7 N.m**
Tstarting/Tnominal:	**2.2**
Istarting/Inominal:	**4.6**
Tmaximum/Tnominal:	**2.7**
Noise:	**62 Db(A)**
Weight:	**26.5 Kg**
Bearing DE:	**6206 2Z C3**
Bearing NDE:	**6206 2Z C3**

Regime - S1 **Altitude - 1000m** **Environment Temperature - 40ºC**

* References applied only in the UK

CONTACTS:

UNIVERSAL MOTORS
Rua de São Brás,745
4480-782 VILA DO CONDE
Tel: +351 252 299 080
Fax: +351 252 299 089
Mail: geral@universalmotors.pt

Universal Motors